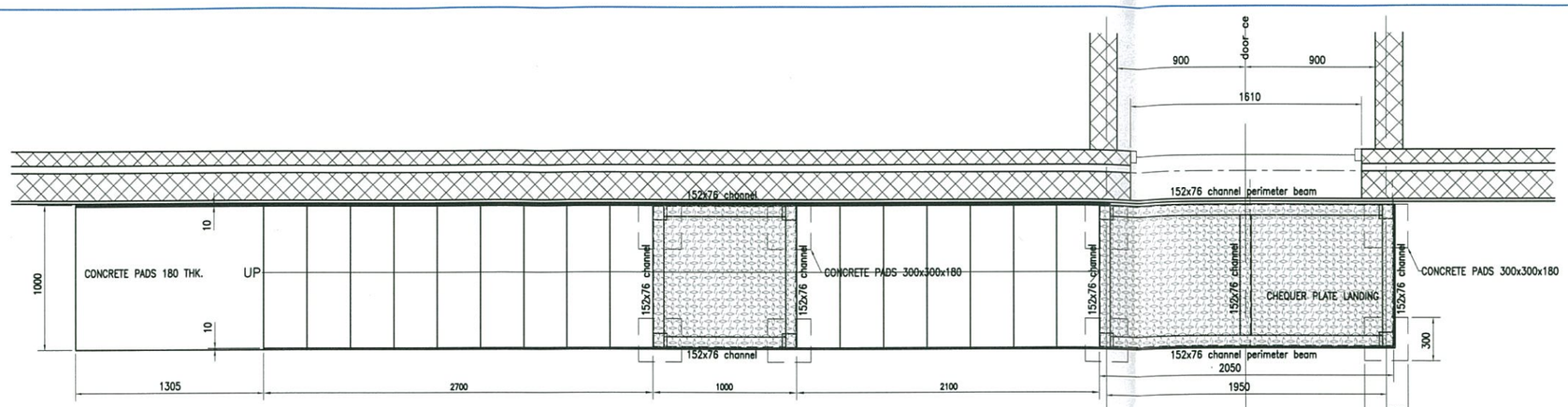

FIRE ESCAPE STAIR PLAN
2No Thus (1No Handed)

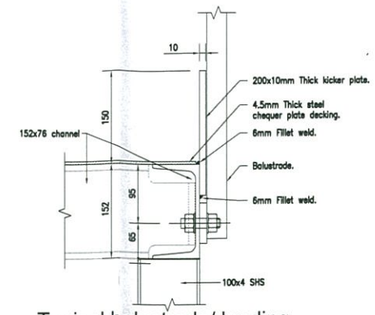

Typical balustrade/ landing fixing detail
(Scale 1:5)

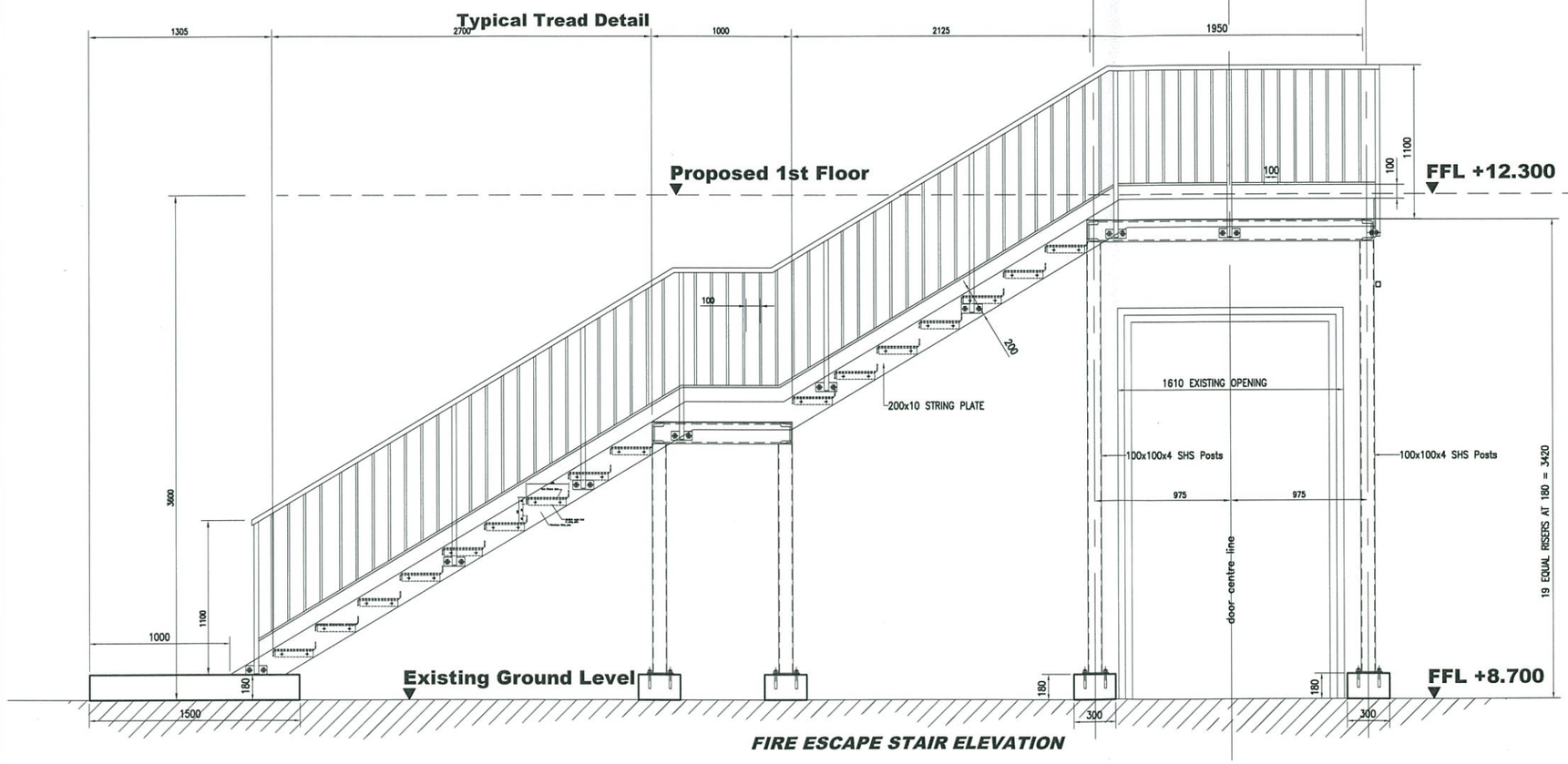

FIRE ESCAPE STAIR ELEVATION

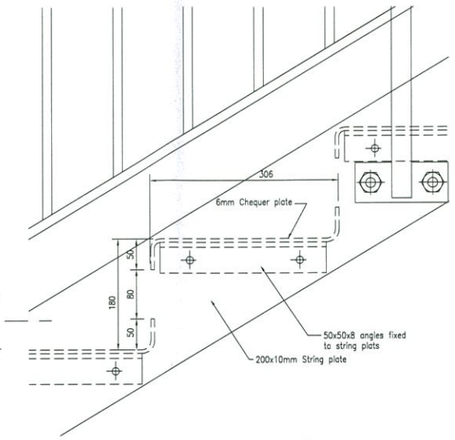

Typical Tread Detail
scale 1:5

ALL STEEL GRADE TO BE S355

NOTES:

General

1. All dimensions are given in millimetres and all levels in meters.
2. Do not scale. Work to figured dimensions. Contractor to check all dimensions. All errors and omissions to be reported to the engineers.

Concrete

3. All structural concrete to comply with BS 8110 and to be grade C 35/20 unless otherwise stated.
4. All concrete surfaces to be free from voids, honeycombing or other blemishes.
5. Concrete to be vibrated by mechanical means.
6. Cement to be ordinary portland to BS 12.

Reinforcement

7. Reinforcement to be cut and bent to BS 8666:05.
8. All rod reinforcement to be high yield deformed type 2 to BS 4449:2005
9. The characteristic strength of reinforcement to be 500 N/mm² (grade B500).
10. Concrete cover to reinforcement to be:

MEMBER	Top	Bottom	Sides
Foundations	-	-	-
Walls	-	-	-
Slabs	-	-	-
Columns	-	-	-
Beams	-	-	-

Steelwork

11. All structural steelwork to be grade S275 and S355 in accordance with BS 5950
12. This drawing to be read in conjunction with fabricators details.
13. Steelwork corrosion protection (generally): SEE STEELWORK SPECIFICATION.
14. All temporary support work to be the sole responsibility of the contractor.

Masonry

15. All structural masonry to be in accordance with BS 5628.
16. Masonry specification; (delete as appropriate) brickwork 15.28 N/mm² blockwork 7N/mm² mortar designation (i) (ii) (iii) (iv)
17. Wall ties to be stainless steel at 450mm centres horizontally and vertically. At openings they are to be spaced at 300mm centres vertically, 225mm from edge of opening, and 150mm from face of columns.

TIMBER

18. All structural timber to be GS grade C18 and treated, All in in accordance with BS 5268

A	REVISED	14.6.13	JP
	Revisions	Date	Revised by

Architects:

. . .

Clients:

GOVERNMENT OF GIBRALTAR

Project :

St JOSEPH'S SCHOOL

Drawing Title:

INTERNAL STAIRS STEELWORK DETAILS

Date	Scale		Drawn By
6.06.13	1:20 5	A1	JP
THIS DRG. MUST BE READ			Engineer
with DRG. No	.		
and SCHEDULES Nos	.		.

Drawing Status

TENDER

Job. No.	Drg. No.	Rev.
787	04	A

BELILOS
CONSULTING ENGINEERS
2/1 ENGINEER LANE GIBRALTAR
TEL +350 20079518 FAX +350 20072293
E-MAIL : mail@belilo.gi

C:\Program Files\Autodesk\AcPublish_6004\01 ST JOSEPHS SCHOOL CLASSROOMS.dwg Colin 25/06/13 - 3:10 P