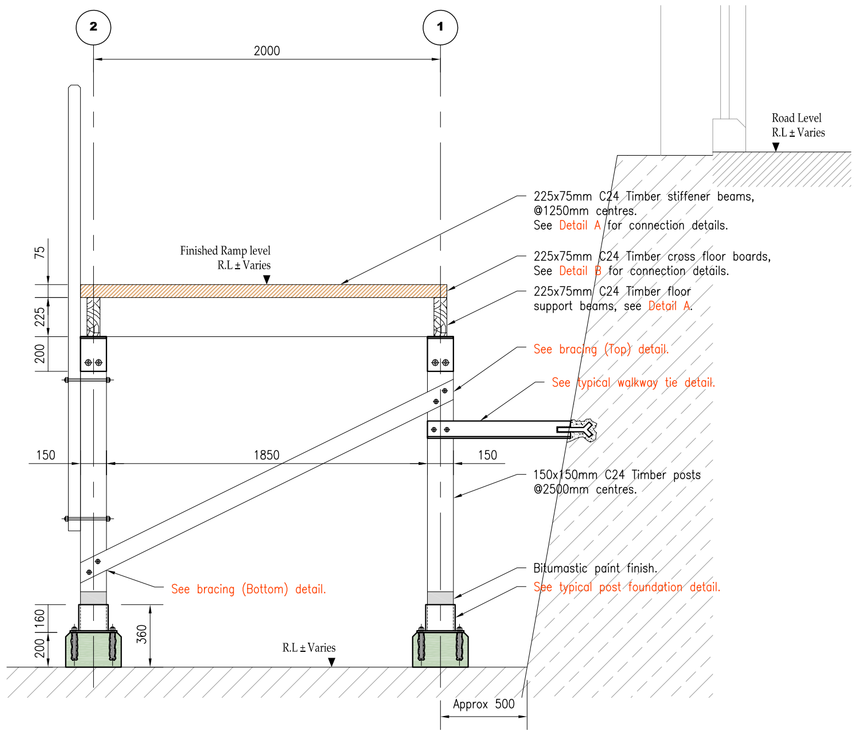

Proposed Typical Walkway Section
(Scale 1:25)

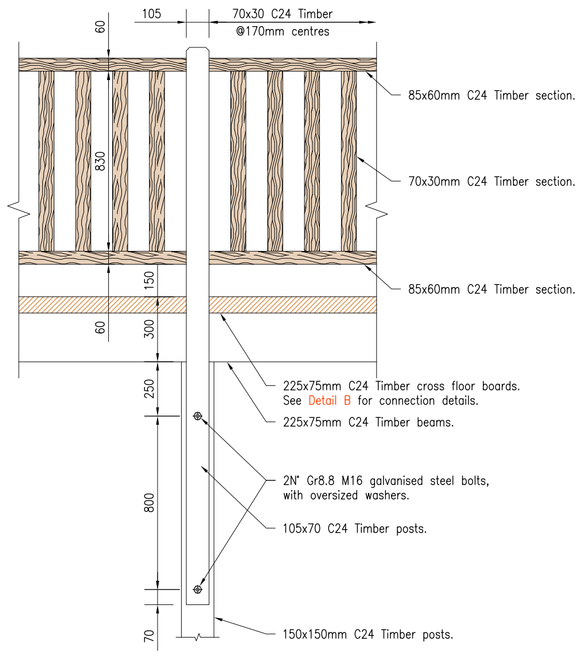

Detail C
(Scale 1:20)

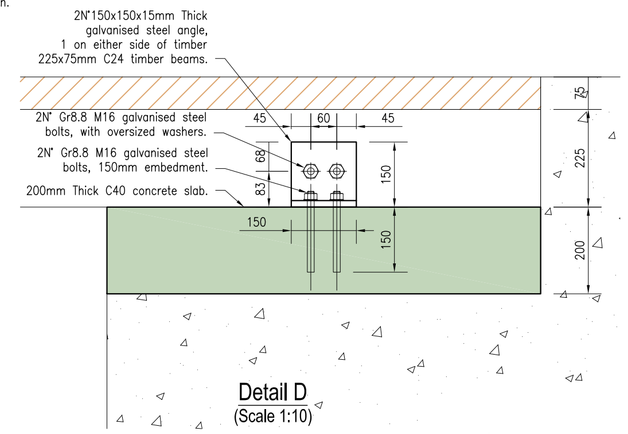

Detail D
(Scale 1:10)

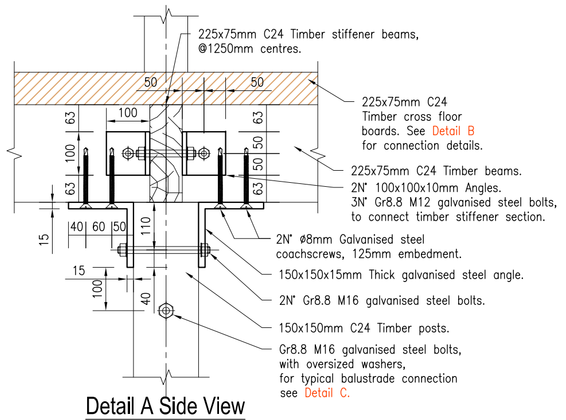

Detail A Side View
(Scale 1:10)

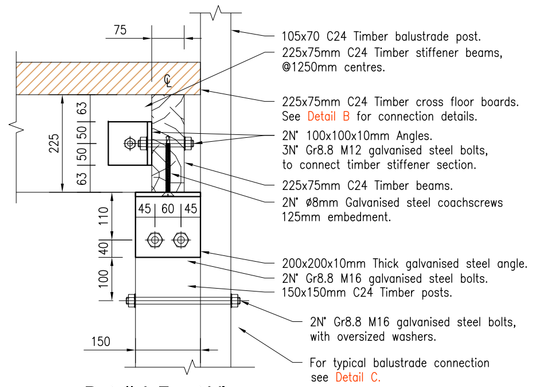

Detail A Front View
(Scale 1:10)

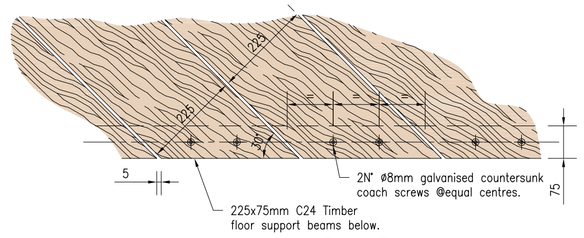

Detail B
(Scale 1:10)

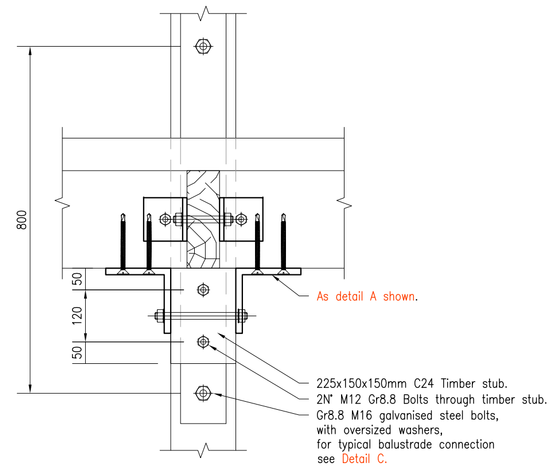

Detail E Front View
(Scale 1:10)

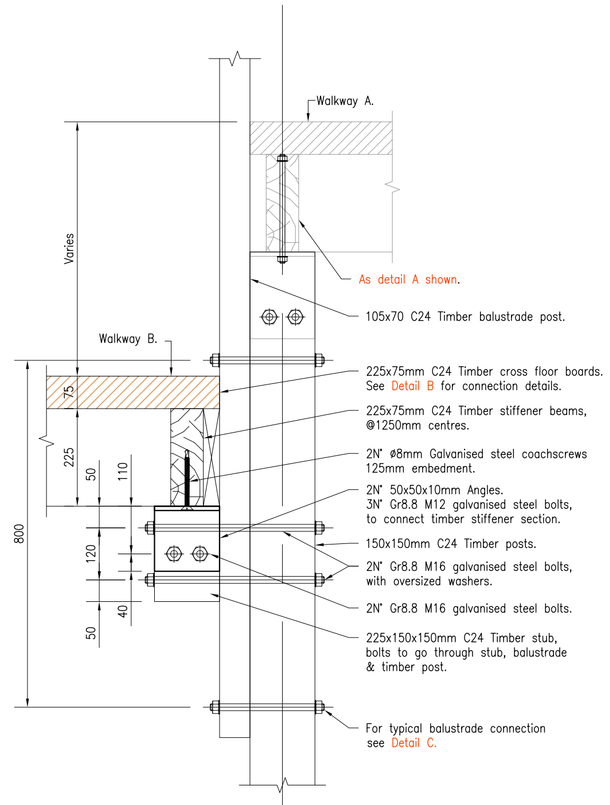

Detail E Side View
(Scale 1:10)

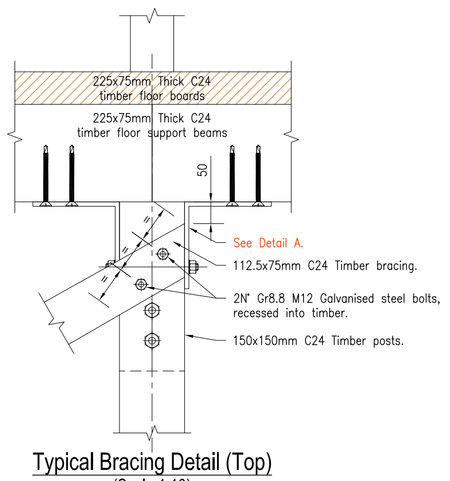

Typical Bracing Detail (Top)
(Scale 1:10)

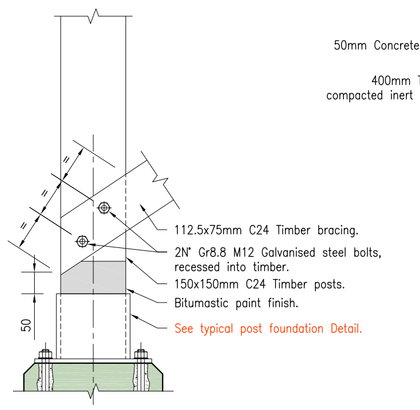

Typical Bracing Detail (Bottom)
(Scale 1:10)

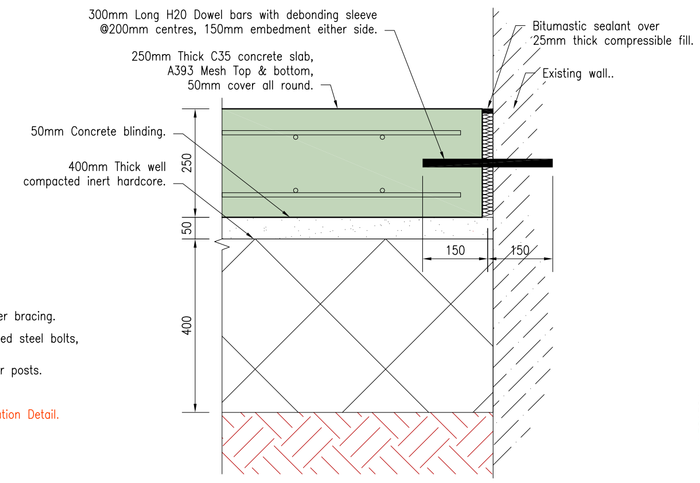

Typical Slab Extension detail.
(Scale 1:10)

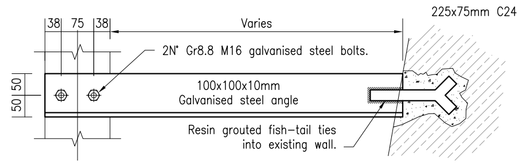

Typical Walkway Tie Detail @5000mm centres
(Scale 1:10)

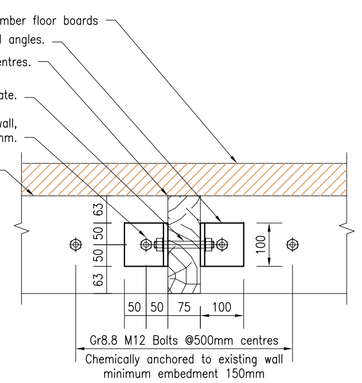

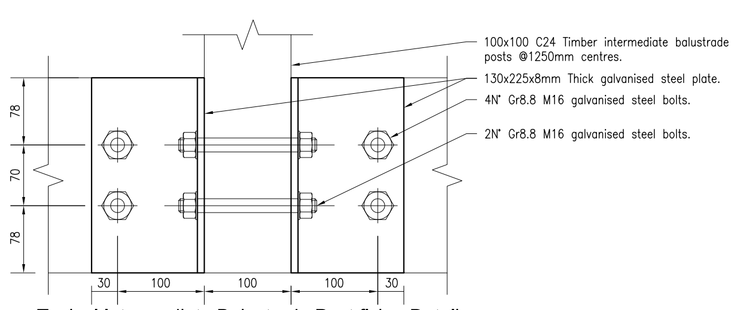

Typical Intermediate Balustrade Post fixing Detail
(Scale 1:5)

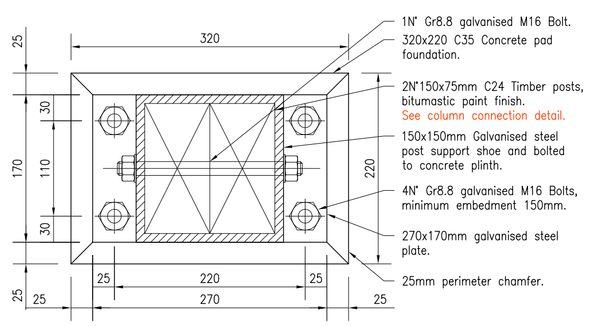

Typical Post Foundation Detail Section
(Scale 1:5) 52N° Thus

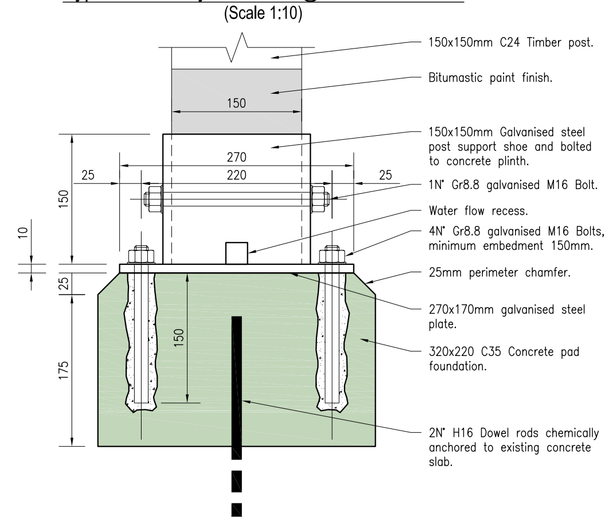

Typical Post Foundation Detail Section
(Scale 1:5) 52N° Thus

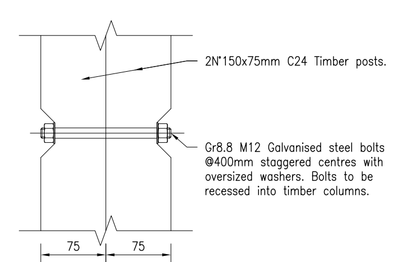

Typical Column Fixing Detail
(Scale 1:5)

NOTES:

General

1. All dimensions are given in millimetres and all levels in meters.
2. Do not scale. Work to figured dimensions. Contractor to check all dimensions. All errors and omissions to be reported to the engineers.

Concrete

3. All structural concrete to comply with BS 8110 and to be grade C 35/20 unless otherwise stated.
4. All concrete surfaces to be free from voids, honeycombing or other blemishes.
5. Concrete to be vibrated by mechanical means.
6. Cement to be ordinary portland to BS 12.

Reinforcement

7. Reinforcement to be cut and bent to BS 8666:05.
8. All rod reinforcement to be high yield deformed type 2 to BS 4449:2005
9. The characteristic strength of reinforcement to be 500 N/mm² (grade B500).
10. Concrete cover to reinforcement to be:

MEMBER	Top	Bottom	Sides
Foundations	-	-	-
Walls	-	-	-
Slabs	50mm	50mm	50mm
Columns	-	-	-
Beams	-	-	-

Steelwork

11. All structural steelwork to be grade S275 and S355 in accordance with BS 5950
12. This drawing to be read in conjunction with fabricators details.
13. Steelwork corrosion protection (generally): SEE STEELWORK SPECIFICATION.
14. All temporary support work to be the sole responsibility of the contractor.

TIMBER

15. All structural timber to be GS grade C24 and treated, All in in accordance with BS 5268

- All galvanised steelwork to be galvanisedto a minimum of 85microns thick.
- For General arrangement plan & longitudinal elevation see drawing: 13 / 498 /02.

A	Detail A revised to show minor corrections. Detail E added. Typical wall plate detail added.	29.05.13	CSF
	Revisions	Date	Revised by

Architects:

Clients:

GJBS

Project :

Proposed Catalan Bay Disabled Access Ramp

Drawing Title:

Proposed General Arrangement, Sections & Details

Date	Scale		Drawn By
06.05.2013	1:100, 25, 10, 5	A1	C.S.Freyone
THIS DRG. MUST BE READ			Engineer
with DRG. No	.		A. Harrision
and SCHEDULES Nos	.		

Drawing Status

For Construction

Job. No.	Drg. No.	Rev.
13/ 498	/03	A

BELILOS
CONSULTING ENGINEERS
2/1 ENGINEER LANE GIBRALTAR
TEL +350 20079548 FAX +350 20072293
E-MAIL : mail@belilo.gi