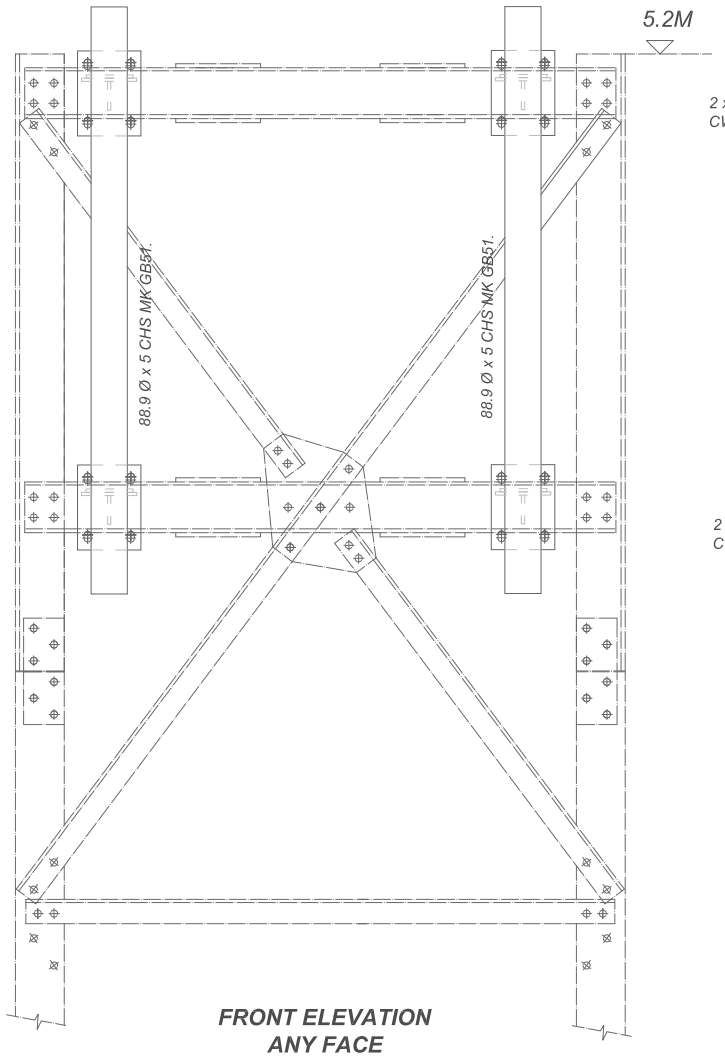

FRONT ELEVATION
ANY FACE

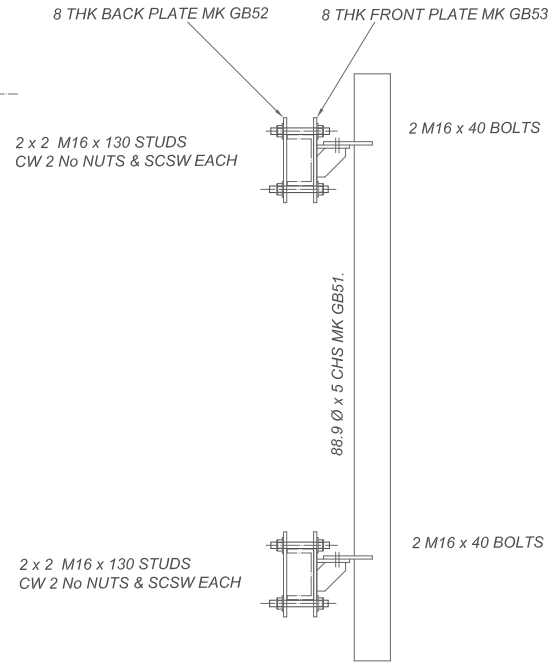

TYPICAL SIDE ELEVATION

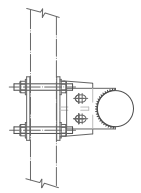

TYPICAL PLAN

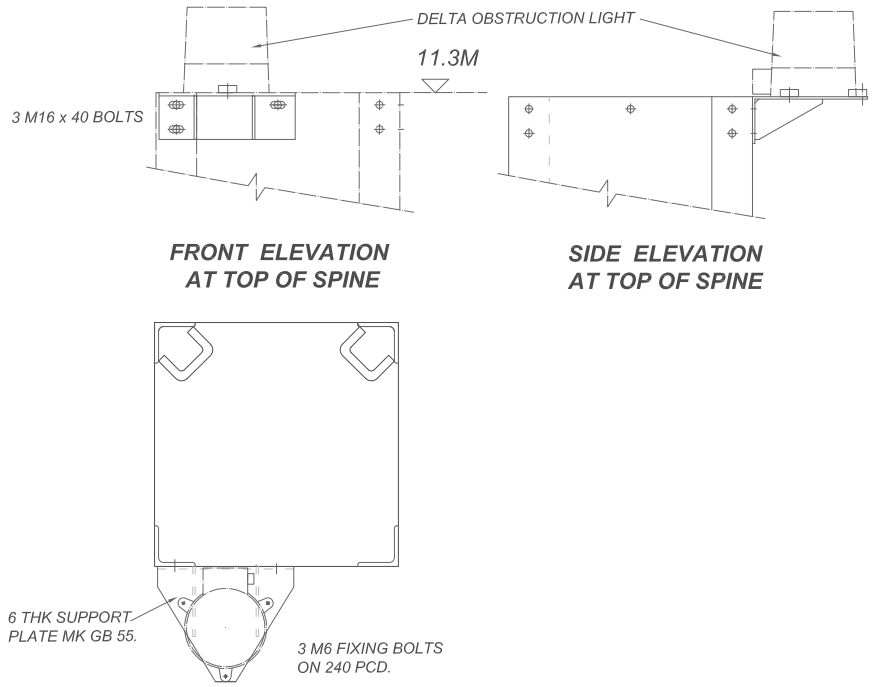

FRONT ELEVATION
AT TOP OF SPINE

SIDE ELEVATION
AT TOP OF SPINE

PLAN

GENERAL NOTES.

1. DO NOT SCALE THIS DRAWING.
2. ALL DIMENSIONS ARE IN mm UNLESS OTHERWISE SPECIFIED
3. THIS DRAWING TO BE READ IN CONJUNCTION WITH DRG Nos 12599 /L/100, & 101.

STEELWORK:

4) ALL MATERIAL TO BE GRADE S275JO TO BS EN 10025.
5) THERMAL CUTTING OF HOLES NOT TO BE USED.
6) ALL WELDING TO BE CARRIED OUT IN ACCORDANCE WITH BS EN1011-2 : 2001 AND BS EN 288 BY AN APPROVED WELDER CONFORMING TO THE REQUIREMENTS OF BS EN 287, PART 1
7) HOLES TO BE 1.5mm LARGER THAN BOLTS.
8) ALL STEEL AND BOLTS TO BE HOT DIPPED GALVANISED TO BS EN ISO 1461
9) ALL BOLTS TO BE GRADE 8.8 IN COMPLIENCE WITH BS 4190 AND SUPPLIED WITH RECTANGULAR SECTION SINGLE COIL SPRING WASHERS TO BS 4320 UNLESS NOTED OTHERWISE.
10) REFER TO MATERIAL LIST 12599/MGB2 AND BOLT LIST 12599/BGB1.

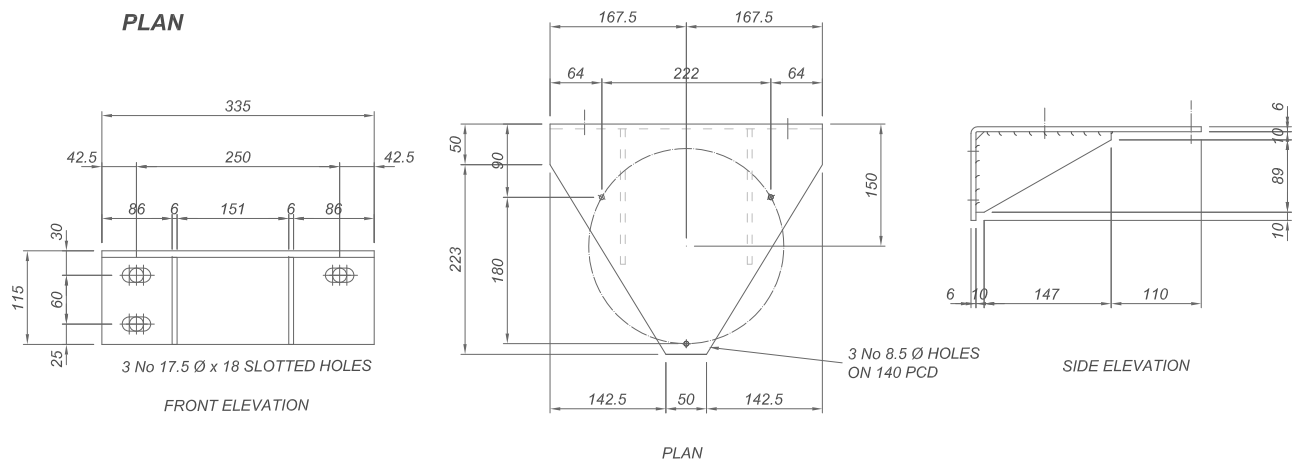

335 x 390 x 6 THK BENT PLATE.

AOL MOUNT PLATE MK GB55 - 1 No THUS

300mm DISH MOUNTING POLES.

STAMP "TOP" THIS END.

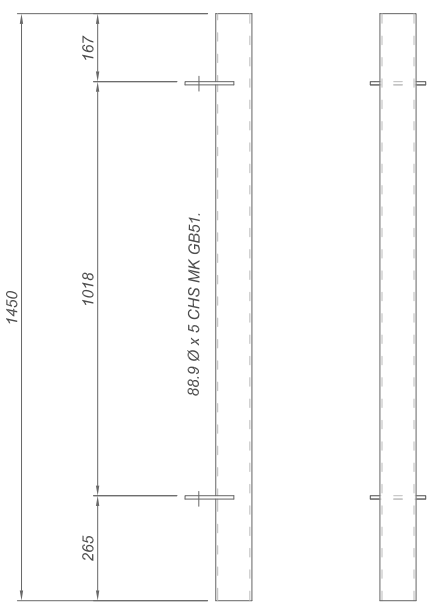

SIDE ELEVATION

FRONT ELEVATION

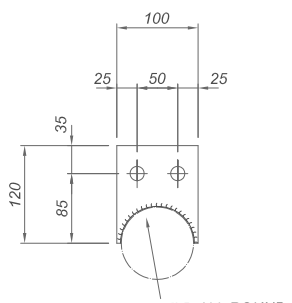

2 No 17.5 Ø HOLES

120 x 100 x 8 THK PLATE.

PLAN

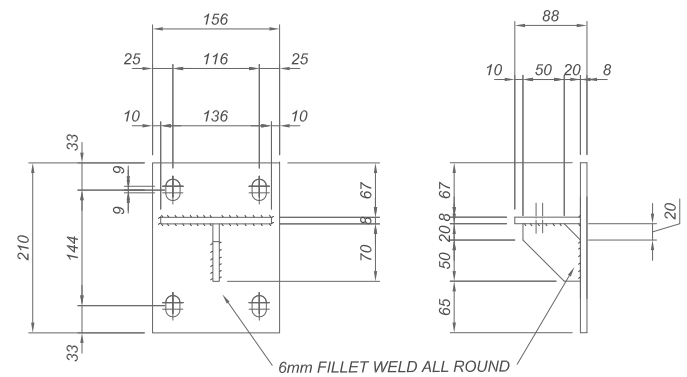

FRONT ELEVATION

SIDE ELEVATION

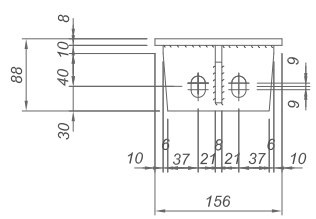

PLAN

6 No 17.5 Ø x 18 SLOTTED HOLES

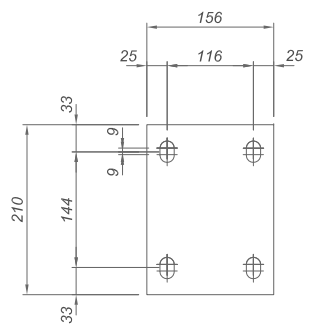

4 No 17.5 Ø x 18 SLOTTED HOLES

210 x 156 x 8 THK PLATE.

POLE MOUNT MK GB51 - 2 No THUS.

FRONT PLATE MK GB53 - 4 No THUS

BACK PLATE MK GB52 - 4 No THUS

BOLT LIST
M16 x 40 11 No
M16 x 130 STUDS 16 No

Rev	Date	By		Chkd
A	15/08/12	MW	CONSTRUCTION ISSUE	MW
	06/08/12	MW	PRELIMINARY ISSUE	MW

MW Structures
Telecommunication Design & Management
Tempest Mews, Broughton Hall Business Park, Broughton, Skipton, North Yorkshire, BD23 3AE
Telephone : +44 (0) 1756 700 942

Project: ARQIVA : GIBRALTAR DTT & DAB TOWER

Title: DETAILS OF DISH MOUNTS & AOL MOUNTING PLATE

Scale	Drawn by	
N T S	RC	12599/L/113A
Date 20.07.12	Checked by MDW	